



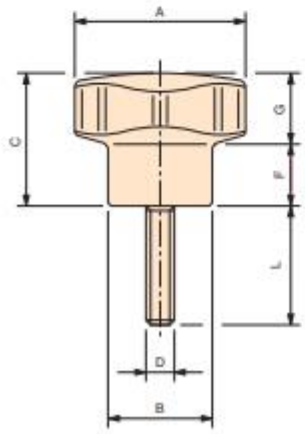

Perno in acciaio zincato filettato.
Threaded zinc plated steel stud.
Tige filetée en acier zingué.

cod.	**modello**	A	B	C	F	G	D	L	Peso gr.
6112005	**VP/20**	20	13	15	7	8	M4	10	5
6112010	**VP/20**	20	13	15	7	8	M4	15	5
6112015	**VP/20**	20	13	15	7	8	M4	25	6
6112020	**VP/20**	20	13	15	7	8	M5	10	6
6112025	**VP/20**	20	13	15	7	8	M5	15	7
6112030	**VP/20**	20	13	15	7	8	M5	20	8
6112035	**VP/20**	20	13	15	7	8	M5	25	8
6112040	**VP/20**	20	13	15	7	8	M6	10	7
6112045	**VP/20**	20	13	15	7	8	M6	15	8
6112050	**VP/20**	20	13	15	7	8	M6	20	9
6112055	**VP/20**	20	13	15	7	8	M6	25	11
6112060	**VP/20**	20	13	15	7	8	M6	35	12
6112065	**VP/30**	30	17	24	11	13	M5	10	11
6112070	**VP/30**	30	17	24	11	13	M5	20	17
6112075	**VP/30**	30	17	24	11	13	M6	10	16
6112080	**VP/30**	30	17	24	11	13	M6	15	18
6112085	**VP/30**	30	17	24	11	13	M6	20	20
6112090	**VP/30**	30	17	24	11	13	M6	25	21
6112095	**VP/30**	30	17	24	11	13	M6	30	22
6112100	**VP/30**	30	17	24	11	13	M6	35	23
6112105	**VP/30**	30	17	24	11	13	M6	40	24
6112110	**VP/30**	30	17	24	11	13	M8	15	23
6112115	**VP/30**	30	17	24	11	13	M8	20	25
6112120	**VP/30**	30	17	24	11	13	M8	25	26
6112121	**VP/30**	30	17	24	11	13	M8	30	27
6112125	**VP/30**	30	17	24	11	13	M8	35	30
6112130	**VP/30**	30	17	24	11	13	M8	45	33
6112135	**VP/30**	30	17	24	11	13	M8	60	37

NOTE: Si forniscono, per quantità adeguate, in colori diversi e con inserti a misura in acciaio, in ottone, in acciaio inox.

Materiale: Duroplasto nero.
Black phenolic plastic.
Duroplast noir.

VP

Volantino a sei lobi
Six lobe-knob

Petit volant à six lobes





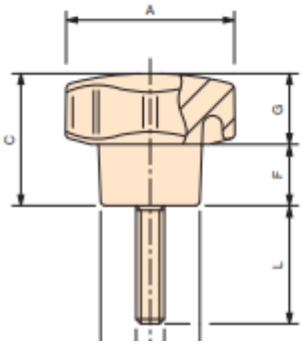

Perno in acciaio zincato filettato.
Threaded zinc plated steel stud.

Tige filetée en acier zingué.

cod.	modello	A	B	C	F	G	D	L	Peso gr.
6112140	VP/40	40	21	28	13	15	M 6	20	33
6112145	VP/40	40	21	28	13	15	M 6	25	34
6112147	VP/40	40	21	28	13	15	M 6	30	35
6112150	VP/40	40	21	28	13	15	M 6	40	37
6112155	VP/40	40	21	28	13	15	M 8	10	32
6112160	VP/40	40	21	28	13	15	M 8	15	36
6112165	VP/40	40	21	28	13	15	M 8	20	38
6112170	VP/40	40	21	28	13	15	M 8	25	39
6112175	VP/40	40	21	28	13	15	M 8	30	40
6112180	VP/40	40	21	28	13	15	M 8	35	42
6112185	VP/40	40	21	28	13	15	M 8	40	44
6112190	VP/40	40	21	28	13	15	M 8	50	46
6112195	VP/40	40	21	28	13	15	M 8	60	51
6112205	VP/40	40	21	28	13	15	M 8	70	55
6112210	VP/40	40	21	28	13	15	M 10	20	45
6112215	VP/40	40	21	28	13	15	M 10	30	50
6112220	VP/40	40	21	28	13	15	M 10	50	60
6112225	VP/40	40	21	28	13	15	M 10	70	70
6112230	VP/50	50	25	33	15	18	M 8	15	51
6112235	VP/50	50	25	33	15	18	M 8	20	52
6112240	VP/50	50	25	33	15	18	M 8	25	55
6112245	VP/50	50	25	33	15	18	M 8	30	56
6112250	VP/50	50	25	33	15	18	M 8	40	60
6112255	VP/50	50	25	33	15	18	M 8	45	61
6112256	VP/50	50	25	33	15	18	M 8	50	61
6112260	VP/50	50	25	33	15	18	M 8	60	67
6112265	VP/50	50	25	33	15	18	M 10	15	58
6112270	VP/50	50	25	33	15	18	M 10	20	61
6112275	VP/50	50	25	33	15	18	M 10	25	63
6112280	VP/50	50	25	33	15	18	M 10	30	65
6112284	VP/50	50	25	33	15	18	M 10	40	70
6112285	VP/50	50	25	33	15	18	M 10	50	76
6112290	VP/50	50	25	33	15	18	M 10	60	84
6112295	VP/50	50	25	33	15	18	M 12	30	86
6112300	VP/50	50	25	33	15	18	M 12	40	93
6112305	VP/50	50	25	33	15	18	M 12	60	108
6112310	VP/60	60	28	35	15	20	M 8	20	75
6112315	VP/60	60	28	35	15	20	M 8	40	80
6112320	VP/60	60	28	35	15	20	M 8	60	87
6112330	VP/60	60	28	35	15	20	M 10	20	82
6112335	VP/60	60	28	35	15	20	M 10	30	86
6112340	VP/60	60	28	35	15	20	M 10	35	94
6112345	VP/60	60	28	35	15	20	M 10	40	96
6112350	VP/60	60	28	35	15	20	M 10	45	99
6112355	VP/60	60	28	35	15	20	M 10	60	107
6112360	VP/60	60	28	35	15	20	M 10	70	110
6112365	VP/60	60	28	35	15	20	M 12	20	101
6112370	VP/60	60	28	35	15	20	M 12	30	107
6112375	VP/60	60	28	35	15	20	M 12	35	107
6112380	VP/60	60	28	35	15	20	M 12	40	115
6112385	VP/60	60	28	35	15	20	M 12	50	122
6112386	VP/60	60	28	35	15	20	M 12	60	127
6112390	VP/60	60	28	35	15	20	M 12	80	133
6112395	VP/70	70	32	42	21	21	M 10	30	115
6112400	VP/70	70	32	42	21	21	M 10	40	116
6112405	VP/70	70	32	42	21	21	M 12	30	133
6112415	VP/70	70	32	42	21	21	M 12	40	138
6112420	VP/70	70	32	42	21	21	M 12	50	145
6112425	VP/70	70	32	42	21	21	M 12	70	156
6112435	VP/70	70	32	42	21	21	M 14	40	170
6112440	VP/70	70	32	42	21	21	M 14	50	181
6112445	VP/90	90	42	55	26	29	M 12	60	255
6112450	VP/90	90	42	55	26	29	M 12	70	260
6112455	VP/90	90	42	55	26	29	M 14	60	283
6112460	VP/90	90	42	55	26	29	M 14	70	288
6112465	VP/90	90	42	55	26	29	M 16	60	322
6112470	VP/90	90	42	55	26	29	M 16	70	328