VX

Valvole e rubinetti INOX
INOX AISI 316 valves
Kugelhähne Edelstahl AISI 316
Vannes INOX AISI 316
Válvulas INOX AISI 316

VX40


VX45


VX46K


VX50-CP


VX51


VX52


VX53


VX54


VX55


VX56


VX57


VX58


VX64


VX65


VX66


Dati tecnici di Valvole e rubinetti INOX
INOX AISI 316 valves technical data
Technischen Daten der Kugelhähne Edelstahl AISI 316
Données techniques des Vannes INOX AISI 316
Datos técnicos de los Válvulas INOX AISI 316

• VX 40

Applicazioni
Le valvole VX consentono, se montate su di un cilindro pneumatico, di scaricare rapidamente la pressione in esso contenuta. Scaricando l'aria direttamente sulle testate si aumentano le velocità, quindi i tempi macchina.

Applications
Lorsqu'elles sont montées sur un cylindre pneumatique, les vannes d'échappement rapides VX permettent l'évacuation rapide de la pression qu'elles contiennent. Si les soupapes se déchargent directement sur les têtes du cylindre, la vitesse augmentera, ainsi que les cycles de la machine.

Applications
When mounted on a pneumatic cylinder, the quick exhaust valves VX permit the quick discharge of the pressure in them. If the valves discharge directly on the heads of the cylinder the speed will increase, as well the cycles of the machine.

Aplicaciónes
Cuando se montan en un cilindro neumático, las válvulas de escape rápido VX permiten la descarga rápida de la presión en ellas. Si las válvulas se descargan directamente en las cabezas del cilindro, la velocidad aumentará, así como los ciclos de la máquina.

Anwendungen
VX Ventile erlauben, wenn auf einem pneumatischen Zylinder montiert, schnell zu entladen den Druck in ihr enthalten ist. Entladen der Luft direkt auf die Köpfe erhören die Geschwindigkeit, dann die Maschinen Zeit.

Materiali		Materials		Werkstoffen		Matériels		Materiales	
Corpo:	Acciaio INOX AISI 316	**Body:**	AISI 316 stainless steel	**Körper:**	Edelstahl AISI 316	**Corps:**	Acier inoxydable AISI 316	**Cuerpo:**	Acero inoxidable AISI 316
O-Ring:	FKM (VITON®) conforme FDA	**O-Ring:**	FKM (VITON®) conforming FDA	**O-Ringe:**	FKM (VITON®) gemäß FDA	**O-ring:**	FKM (VITON®) conforme FDA	**Junta tórica:**	FKM (VITON®) compatible FDA

Pressione e temperatura	Pressure and Temperature	Druck und Temperatur	Pression et Température	Presión y Temperatura
Pressione (Temperatura di utilizzo20°C): **2/10 Bar**	Pressure (working temperature 20°C): **2/10 Bar**	Druck (Betriebstemperatur von 20°C): **2/10 Bar**	Pression (température d'utilise de 20°C): **2/10 bar**	Presión (temperatura de funcionamiento 20°C): **2/10 Bar**
Temperatura: **-40°C / +180°C**	Temperature: **-40°F / +356°F**	Temperatur: **-40°C / +180°C**	Température: **-40°C / +180°C**	Temperatura: **-40°C / +180°C**

Filettatura	Thread types	Gewinde	Filetage	Roscado
BSPP cilindrica UNI-ISO228	BSPP parallel UNI-ISO228	BSPP zylindrisch UNI-ISO228	BSPP cylindrique UNI-ISO228	BSPP cilíndrico UNI-ISO 228

• VX 45 - VX 46K

Materiali		Materials		Werkstoffen		Matériels		Materiales	
Coperchio:	Acciaio INOX AISI 316	**Cover:**	AISI 316 stainless steel	**Decken:**	Edelstahl AISI 316	**Couverture:**	Acier inoxydable AISI 316	**Cubierta:**	Acero inoxidable AISI 316
Guarnizione sfera:	PTFE	**Seat ball:**	PTFE	**Kugelsitz:**	PTFE	**Sceau balle:**	PTFE	**Sello bola:**	PTFE
Sfera:	Acciaio INOX AISI 316	**Ball:**	AISI 316 stainless steel	**Kugel:**	Edelstahl AISI 316	**Sphère:**	Acier inoxydable AISI 316	**Esfera:**	Acero inoxidable AISI 316
Corpo:	Acciaio INOX AISI 316	**Body:**	AISI 316 stainless steel	**Körper:**	Edelstahl AISI 316	**Corps:**	Acier inoxydable AISI 316	**Cuerpo:**	Acero inoxidable AISI 316
Guarnizione alberino:	PTFE	**Shaft seal:**	PTFEW	**Wellen-dichtung:**	PTFE	**Sceau après:**	PTFE	**Sello mensaje:**	PTFE
Alberino:	Acciaio INOX AISI 304	**Shaft:**	AISI 304 stainless steel	**Wellen:**	Edelstahl AISI 304	**Après:**	Acier inoxydable AISI 304	**Mensaje:**	Acero inoxidable AISI 304
Vite:	Acciaio INOX AISI 304	**Screw:**	AISI 304 stainless steel	**Schrauben:**	Edelstahl AISI 304	**Vis:**	Acero inoxydable AISI 304	**Tornillo:**	Acero inoxidable AISI 304
O-Ring:	NBR esente da silicone	**O-Ring:**	NBR silicon free	**O-Ringe:**	NBR Silikonfrei	**O-ring:**	NBS sans silicone	**Junta tórica:**	NBR sin silicona
Leva:	Alluminio	**Lever:**	Aluminium	**Hebel:**	Aluminium	**Levier:**	Aluminium	**Palanca:**	Aluminio

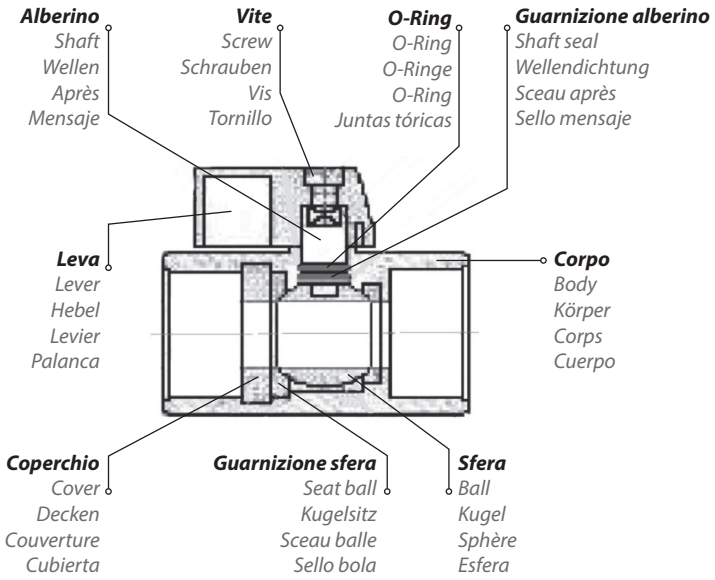

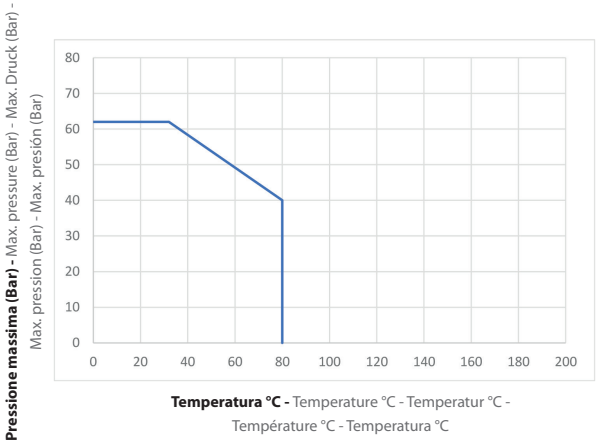

Pressione e temperatura	Pressure and Temperature	Druck und Temperatur	Pression et Température	Presión y Temperatura
Pressione (-20°C/+35°C): **63 Bar**	Pressure (-4°F/+95°F): **63 Bar**	Druck (-20°C/+35°C): **63 Bar**	Pression (-20°C/+35°C): **63 bar**	Presión (-20°C/+35°C): **63 Bar**
Temperatura: **-20°C / +80°C**	Temperature: **-4°F / +176°F**	Temperatur: **-20°C / +80°C**	Température: **-20°C / +80°C**	Temperatura: **-20°C / +80°C**

• VX 50-CP - VX 52

Materiali		Materials		Werkstoffen		Matériels		Materiales	
Corpo:	Acciaio INOX AISI 316	**Body:**	AISI 316 stainless steel	**Körper:**	Edelstahl AISI 316	**Corps:**	Acier inoxydable AISI 316	**Cuerpo:**	Acero inoxidable AISI 316
Manicotto:	Acciaio INOX AISI 316	**Body end:**	AISI 316 stainless steel	**Armel:**	Edelstahl AISI 316	**Manche:**	Acier inoxydable AISI 316	**Manga:**	Acero inoxidable AISI 316
Seggio:	PTFE con 15% vetro	**Seat:**	PTFE 15% glass fiber	**Sitz:**	PTFE 15% Glas	**Siège:**	PTFE avec 15% de verre	**Asiento:**	PTFE con 15% de vidrio
Sfera:	Acciaio INOX AISI 316	**Ball:**	AISI 316 stainless steel	**Kugel:**	Edelstahl AISI 316	**Sphère:**	Acier inoxydable AISI 316	**Esfera:**	Acero inoxidable AISI 316
Asta:	Acciaio INOX AISI 316	**Stem:**	AISI 316 stainless steel	**Stange:**	Edelstahl AISI 316	**Canne:**	Acier inoxydable AISI 316	**Vara:**	Acero inoxidable AISI 316
Guarnizione asta:	PTFE	**Stem seat:**	PTFE	**Dichtund des Stange:**	PTFE	**Joint de tige:**	PTFE	**Prensaesto-pas:**	PTFE
Premistoppa:	Acciaio INOX AISI 304	**Packing nut:**	AISI 304 stainless steel	**Stopfbuchse:**	Edelstahl AISI 304	**Presse-étoupe:**	Acier inoxydable AISI 304	**Junta tórica:**	Acero inoxidable AISI 304
Maniglia:	Acciaio INOX AISI 304	**Handle:**	AISI 304 stainless steel	**Griff:**	Edelstahl AISI 304	**Poignée:**	Acier inoxydable AISI 304	**Manejar:**	Acero inoxidable AISI 304
Dado:	Acciaio INOX AISI 304	**Nut:**	AISI 304 stainless steel	**Mutter:**	Edelstahl AISI 304	**Écrou:**	Acier inoxydable AISI 304	**Tuerca:**	Acero inoxidable AISI 304
Bloccaggio:	Acciaio INOX AISI 304	**Locking:**	AISI 304 stainless steel	**Blockierung:**	Edelstahl AISI 304	**Verrouillage:**	Acier inoxydable AISI 304	**Cierre:**	Acero inoxidable AISI 304
Guarnizione giunzione:	PTFE	**Joint gasket:**	PTFE	**Fugen-dichtung:**	PTFE	**Joint:**	PTFE	**Sello de junta:**	PTFE

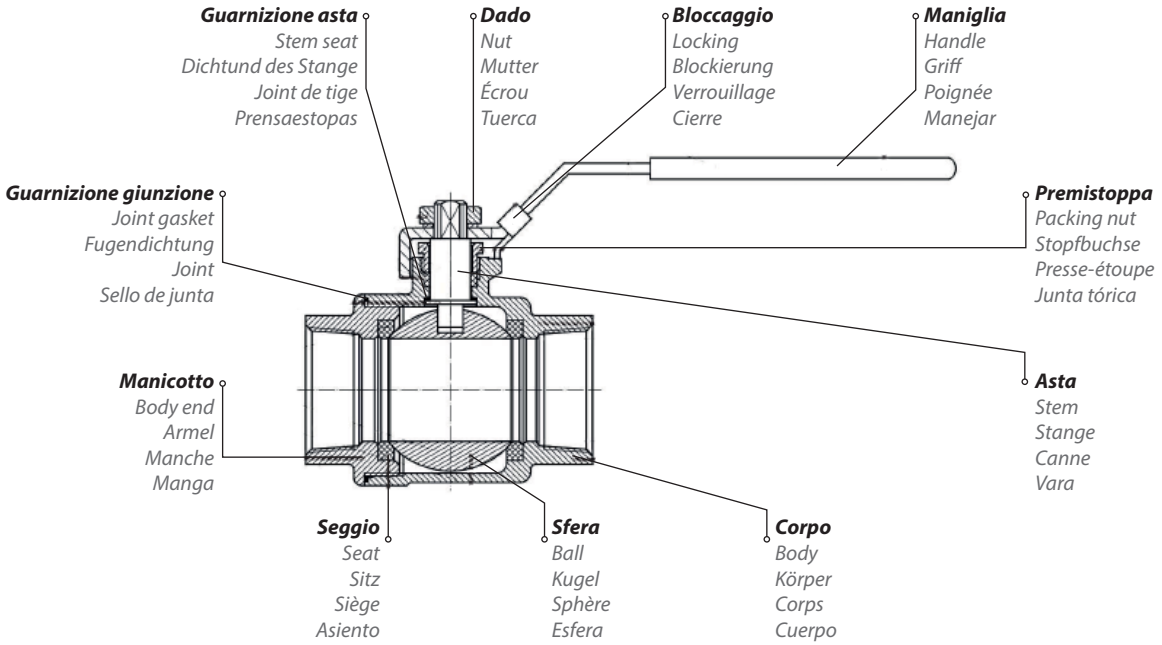

VX50-CP

Pressione e temperatura	Pressure and Temperature	Druck und Temperatur	Pression et Température	Presión y Temperatura
Pressione: **76 Bar**	Pressure: **76 Bar**	Druck: **76 Bar**	Pression: **76 bar**	Presión: **76 Bar**
Temperatura: **-40°C / +220°C**	Temperature: **-40°F / +428°F**	Temperatur: **-40°C / +220°C**	Température: **-40°C / +220°C**	Temperatura: **-40°C / +220°C**

VX52

Pressione e temperatura	Pressure and Temperature	Druck und Temperatur	Pression et Température	Presión y Temperatura
Pressione: **70 Bar**	Pressure: **70 Bar**	Druck: **70 Bar**	Pression: **70 Bar**	Presión: **70 Bar**
Temperatura max: **200°C**	Temperature max: **392°F**	Temperatur max: **200°C**	Température max: **200°C**	Temperatura max: **200°C**

Filettatura	Thread types	Gewinde	Filetage	Roscado
BSPP cilindrica UNI-ISO228	BSPP parallel UNI-ISO228	BSPP zylindrisch UNI-ISO228	BSPP cylindrique UNI-ISO228	BSPP cilíndrico UNI-ISO 228

Note
Asta antiscoppio

Note
Anti blow-out steam

Note
Stange Überdruck

Notes
Canne anti-explosion

Notas
Vara antiexplosión

• VX 51 - VX53

Materiali		Materials		Werkstoffen		Matériels		Materiales	
Corpo:	Acciaio INOX AISI 316	**Body:**	AISI 316 stainless steel	**Körper:**	Edelstahl AISI 316	**Corps:**	Acier inoxydable AISI 316	**Cuerpo:**	Acero inoxidable AISI 316
Maniglia:	Acciaio INOX AISI 304	**Handle:**	AISI 304 stainless steel	**Griff:**	Edelstahl AISI 304	**Poignée:**	Acier inoxydable AISI 304	**Manejar:**	Acero inoxidable AISI 304
Sfera:	Acciaio INOX AISI 316	**Ball:**	AISI 316 stainless steel	**Kugel:**	Edelstahl AISI 316	**Sphère:**	Acier inoxydable AISI 316	**Esfera:**	Acero inoxidable AISI 316
Sede sfera:	PTFE	**Ball seat:**	PTFE	**Kugelsitz:**	PTFE	**Siège de sphère:**	PTFE	**Asiento de esfera:**	PTFE
Asta:	Acciaio INOX AISI 304	**Stem:**	AISI 304 stainless steel	**Stange:**	Edelstahl AISI 304	**Canne:**	Acier inoxydable AISI 304	**Vara:**	Acero inoxidable AISI 304
Dado asta:	Acciaio INOX AISI 304	**Stem Nut:**	AISI 304 stainless steel	**Stange Mutter:**	Edelstahl AISI 304	**Canne Écrou:**	Acier inoxydable AISI 304	**Vara Tuerca:**	Acero inoxidable AISI 304
Rondella:	Acciaio INOX AISI 304	**Seal:**	AISI 304 stainless steel	**Scheibe:**	Edelstahl AISI 304	**Rondelle:**	Acier inoxydable AISI 304	**Arandela:**	Acero inoxidable AISI 304
Guarnizione asta:	PTFE	**Stem seat:**	PTFE	**Dichtund des Stange:**	PTFE	**Joint de tige:**	PTFE	**Prensaesto-pas:**	PTFE
Manicotto:	Acciaio INOX AISI 316	**Body end:**	AISI 316 stainless steel	**Armel:**	Edelstahl AISI 316	**Manche:**	Acier inoxydable AISI 316	**Manga:**	Acero inoxidable AISI 316
Guarnizione molla:	Acciaio INOX AISI 304	**Spring seat:**	AISI 304 stainless steel	**Dichtund Frühling:**	Edelstahl AISI 304	**Joint ressort:**	Acier inoxydable AISI 304	**Sello resorte:**	Acero inoxidable AISI 304
Guarnizione giunzione:	PTFE	**Joint gasket:**	PTFE	**Fugen-dichtung:**	PTFE	**Joint:**	PTFE	**Sello de junta:**	PTFE

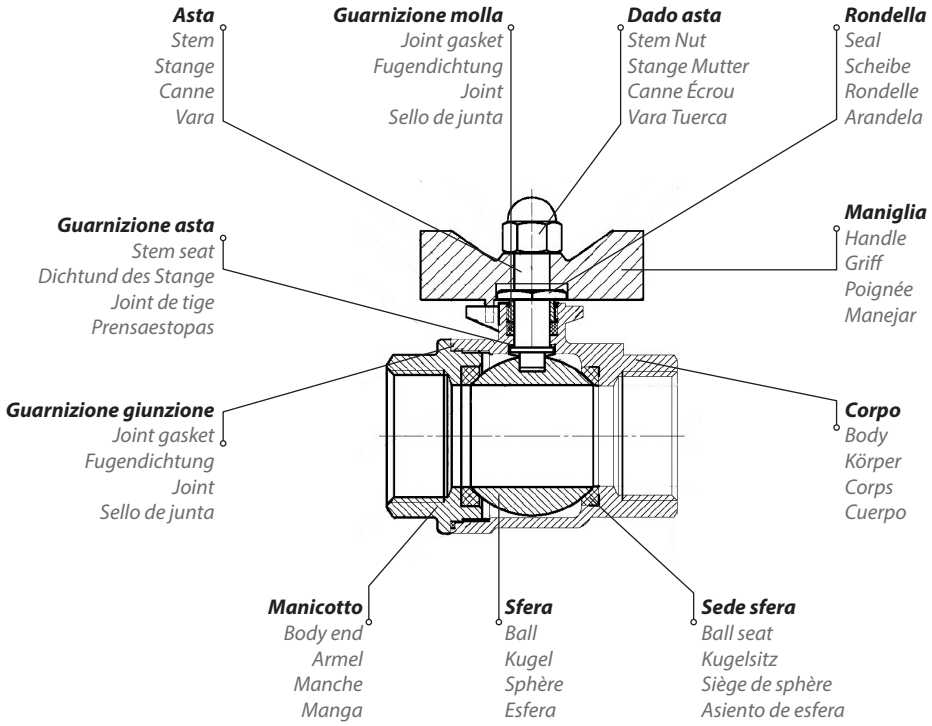

VX51

Pressione e temperatura	Pressure and Temperature	Druck und Temperatur	Pression et Température	Presión y Temperatura
Pressione: **69 Bar**	Pressure: **69 Bar**	Druck: **69 Bar**	Pression: **69 bar**	Presión: **69 Bar**
Temperatura: **-40°C / +200°C**	Temperature: **-40°F / +392°F**	Temperatur: **-40°C / +200°C**	Température: **-40°C / +200°C**	Temperatura: **-40°C / +200°C**

VX53

Pressione e temperatura	Pressure and Temperature	Druck und Temperatur	Pression et Température	Presión y Temperatura
Pressione: **70 Bar**	Pressure: **70 Bar**	Druck: **70 Bar**	Pression: **70 Bar**	Presión: **70 Bar**
Temperatura max: **200°C**	Temperature max: **392°F**	Temperatur max: **200°C**	Température max: **200°C**	Temperatura max: **200°C**

Filettatura	Thread types	Gewinde	Filetage	Roscado
BSPP cilindrica UNI-ISO228	BSPP parallel UNI-ISO228	BSPP zylindrisch UNI-ISO228	BSPP cylindrique UNI-ISO228	BSPP cilíndrico UNI-ISO 228

Filetti
Filettature da 1/4" a 1"

Threads
Threads from 1/4" to 1"

Gewinde
Gewinde von 1/4" bis 1"

Filets
Filetages de 1/4" à 1"

Roscas
Roscas de 1/4" a 1"

Note
Dispositivo di blocco

Note
Padlocking device

Note
Vorhängeschloss

Notes
Dispositif de cadenassage

Notas
Dispositivo de candado

• VX 54 - VX 55

Materiali		Materials		Werkstoffen		Matériels		Materiales	
Corpo:	CF8M/CF8	**Body:**	CF8M/CF8	**Körper:**	CF8M/CF8	**Corps:**	CF8M/CF8	**Cuerpo:**	CF8M/CF8
Manicotto:	CF8M/CF8	**Body end:**	CF8M/CF8	**Armel:**	CF8M/CF8	**Manche:**	CF8M/CF8	**Manga:**	CF8M/CF8
Sede sfera:	RPTFE	**Ball seat:**	RPTFE	**Kugelsitz:**	RPTFE	**Siège de sphère:**	RPTFE	**Asiento de esfera:**	RPTFE
Sfera:	CF8M/CF8	**Ball:**	CF8M/CF8	**Kugel:**	CF8M/CF8	**Sphère:**	CF8M/CF8	**Esfera:**	CF8M/CF8
Asta:	Acciaio INOX AISI 304/316	**Stem:**	AISI 304/316 stainless steel	**Stange:**	Edelstahl AISI 304/316	**Canne:**	Acier inoxydable AISI 304/316	**Vara:**	Acero inoxidable AISI 304/316
Guarnizione:	PTFE	**Gasket:**	PTFE	**Dichtung:**	PTFE	**Joint:**	PTFE	**Junta:**	PTFE
Sede asta:	PTFE	**Stem packing:**	PTFE	**Stängelp-ackung:**	PTFE	**Emballage de tige:**	PTFE	**Embalaje de vara:**	PTFE
Dado:	Acciaio INOX AISI 304	**Nut:**	AISI 304 stainless steel	**Mutter:**	Edelstahl AISI 304	**Écrou:**	Acier inoxydable AISI 304	**Tuerca:**	Acero inoxidable AISI 304
Rondella:	Acciaio INOX AISI 304	**Seal:**	AISI 304 stainless steel	**Scheibe:**	Edelstahl AISI 304	**Rondelle:**	Acier inoxydable AISI 304	**Arandela:**	Acero inoxidable AISI 304
Maniglia:	Acciaio INOX AISI 304/316	**Handle:**	AISI 304/316 stainless steel	**Griff:**	Edelstahl AISI 304/316	**Poignée:**	Acier inoxydable AISI 304/316	**Manejar:**	Acero inoxidable AISI 304/316
Cover plastica:	PVC	**Plastic sleeve:**	PVC	**Kunststoffab-deckung:**	PVC	**Couvercle en plastique:**	PVC	**Cubierta de plástico:**	PVC
O-Ring:	FKM (VITON®) conforme FDA	**O-Ring:**	FKM (VITON®) conforming FDA	**O-Ringe:**	FKM (VITON®) gemäß FDA	**O-ring:**	FKM (VITON ®) conforme FDA	**Junta tórica:**	FKM (VITON®) compatible FDA

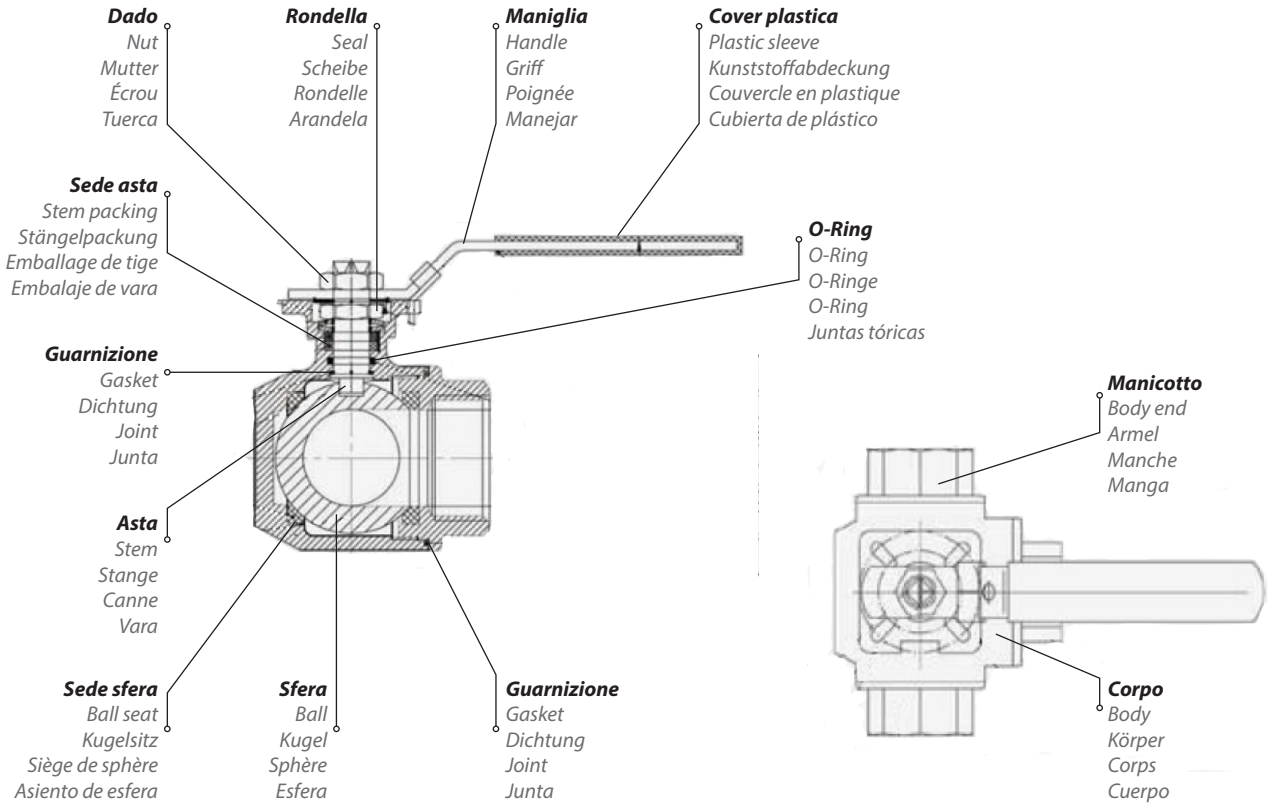

Pressione e temperatura	Pressure and Temperature	Druck und Temperatur	Pression et Température	Presión y Temperatura
Pressione: **63 Bar**	Pressure: **63 Bar**	Druck: **63 Bar**	Pression: **63 Bar**	Presión: **63 Bar**
Temperatura: **-50°C/+250°C**	Temperature: **-58°F/+482°F**	Temperatur: **-50°C/+250°C**	Température: **-50°C/+250°C**	Temperatura: **-50°C/+250°C**

Filettatura	Thread types	Gewinde	Filetage	Roscado
BSPP cilindrica UNI-ISO228	BSPP parallel UNI-ISO228	BSPP zylindrisch UNI-ISO228	BSPP cylindrique UNI-ISO228	BSPP cilíndrico UNI-ISO 228

Filetti
Filettature da 1/4" a 2"

Threads
Threads from 1/4" to 2"

Gewinde
Gewinde von 1/4" bis 2"

Filets
Filetages de 1/4" à 2"

Roscas
Roscas de 1/4" a 2"

• VX 56

Materiali		Materials		Werkstoffen		Matériels		Materiales	
Corpo:	CF8M/CF8	**Body:**	CF8M/CF8	**Körper:**	CF8M/CF8	**Corps:**	CF8M/CF8	**Cuerpo:**	CF8M/CF8
Manicotto:	Acciaio INOX AISI 316	**Body end:**	AISI 316 stainless steel	**Armel:**	Edelstahl AISI 316	**Manche:**	Acier inoxydable AISI 316	**Manga:**	Acero inoxidable AISI 316
Sede sfera:	PTFE	**Ball seat:**	PTFE	**Kugelsitz:**	PTFE	**Siège de sphère:**	PTFE	**Asiento de esfera:**	PTFE
Sfera:	Acciaio INOX AISI 316/304	**Ball:**	AISI 316/304 stainless steel	**Kugel:**	Edelstahl AISI 316/304	**Sphère:**	Acier inoxydable AISI 316/304	**Esfera:**	Acero inoxidable AISI 316/304
Asta:	Acciaio INOX AISI 304	**Stem:**	AISI 304 stainless steel	**Stange:**	Edelstahl AISI 304	**Canne:**	Acier inoxydable AISI 304	**Vara:**	Acero inoxidable AISI 304
Guarnizione asta:	PTFE	**Stem seat:**	PTFE	**Dichtund des Stange:**	PTFE	**Joint de tige:**	PTFE	**Prensaestopas:**	PTFE
Sede asta:	PTFE	**Stem packing:**	PTFE	**Stängelpackung:**	PTFE	**Emballage de tige:**	PTFE	**Embalaje de vara:**	PTFE
Maniglia:	Acciaio INOX AISI 304	**Handle:**	AISI 304 stainless steel	**Griff:**	Edelstahl AISI 304	**Poignée:**	Acier inoxydable AISI 304	**Manejar:**	Acero inoxidable AISI 304
Dado:	Acciaio INOX AISI 304	**Nut:**	AISI 304 stainless steel	**Mutter:**	Edelstahl AISI 304	**Écrou:**	Acier inoxydable AISI 304	**Tuerca:**	Acero inoxidable AISI 304
Bloccaggio:	Acciaio INOX AISI 304	**Locking:**	AISI 304 stainless steel	**Blockierung:**	Edelstahl AISI 304	**Verrouillage:**	Acier inoxydable AISI 304	**Cierre:**	Acero inoxidable AISI 304
Bullone:	Acciaio INOX AISI 304	**Bolt:**	AISI 304 stainless steel	**Bollzen:**	Edelstahl AISI 304	**Boulon:**	Acier inoxydable AISI 304	**Cerrojo:**	Acero inoxidable AISI 304
Guarnizione:	PTFE	**Gasket:**	PTFE	**Dichtung:**	PTFE	**Joint:**	PTFE	**Junta:**	PTFE
Cover plastica:	Plastica	**Plastic sleeve:**	Plastic	**Kunststoffabdeckung:**	Kunststoff	**Couvercle en plastique:**	Plastique	**Cubierta de plástico:**	Plástico

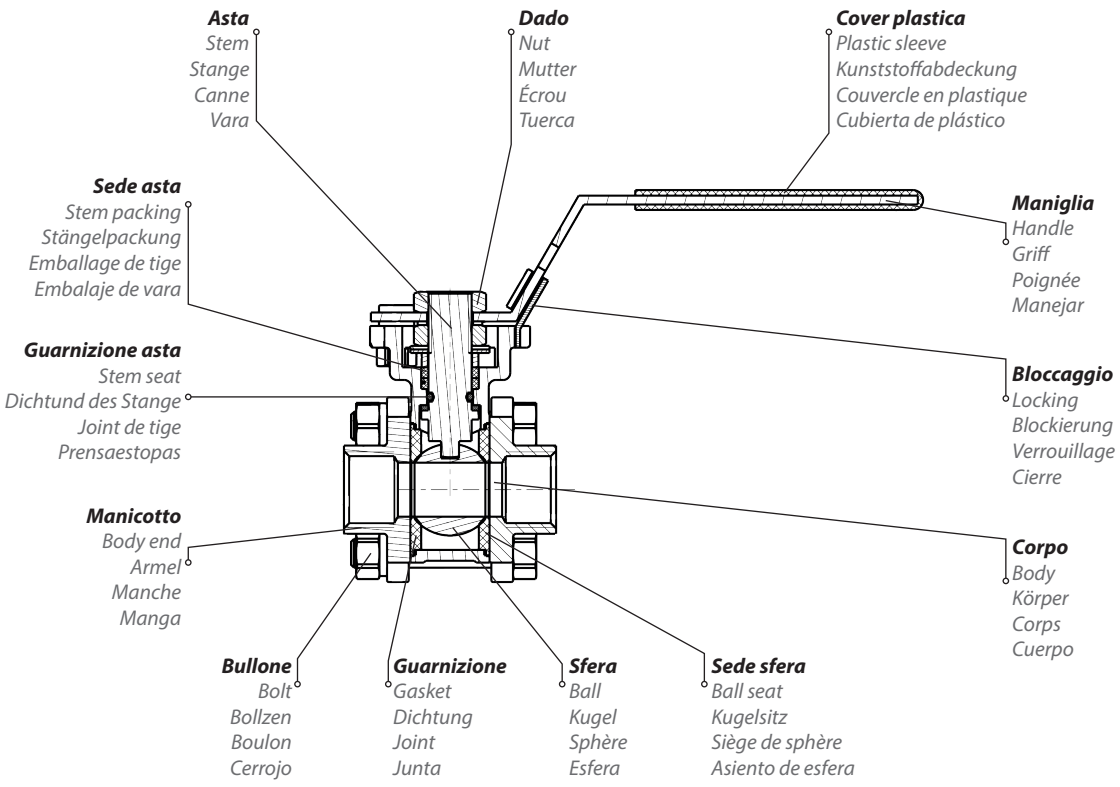

Pressione e temperatura	Pressure and Temperature	Druck und Temperatur	Pression et Température	Presión y Temperatura
Pressione: **63 Bar**	Pressure: **63 Bar**	Druck: **63 Bar**	Pression: **63 Bar**	Presión: **63 Bar**
Temperatura: **-50°C/+250°C**	Temperature: **-58°F/+482°F**	Temperatur: **-50°C/+250°C**	Température: **-50°C/+250°C**	Temperatura: **-50°C/+250°C**

Filettatura	Thread types	Gewinde	Filetage	Roscado
BSPP cilindrica UNI-ISO7/1R	BSPP parallel UNI-ISO7/1R	BSPP zylindrisch UNI-ISO7/1R	BSPP cylindrique UNI-ISO7/1R	BSPP cilíndrico UNI-ISO7/1R

Filetti
Filettature da 1/8" a 1"

Threads
Threads from 1/8" to 1"

Gewinde
Gewinde von 1/8" bis 1"

Filets
Filetages de 1/8" à 1"

Roscas
Roscas de 1/8" a 1"

Note
Su richiesta: filettatura NPT ANSI B.1.20.1

Note
On request: thread NPT ANSI B.1.20.1

Note
Auf Anfrage: Gewinde NPT ANSI B.1.20.1

Notes
Sur demande: filetage NPT ANSI B.1.20.1

Notas
A petición: roscado NPT ANSI B.1.20.1

• VX 57

Materiali		Materials		Werkstoffen		Matériels		Materiales	
Corpo:	Acciaio INOX AISI 316	**Body:**	AISI 316 stainless steel	**Körper:**	Edelstahl AISI 316	**Corps:**	Acier inoxydable AISI 316	**Cuerpo:**	Acero inoxidable AISI 316
Guarnizione:	FKM (VITON®) conforme FDA	**Seat:**	FKM (VITON®) conforming FDA	**Dichtung:**	FKM (VITON®) gemäß FDA	**Sceau:**	FKM (VITON®) conforme FDA	**Sello:**	FKM (VITON®) compatible FDA

Pressione e temperatura	Pressure and Temperature	Druck und Temperatur	Pression et Température	Presión y Temperatura
Pressione: **0,25/40 Bar**	Pressure: **0,25/40 Bar**	Druck: **0,25/40 Bar**	Pression: **0,25/40 Bar**	Presión: **0,25/40 Bar**
Temperatura: **-20°C / +180°C**	Temperature: **-4°F / +356°F**	Temperatur: **-20°C / +180°C**	Température: **-20°C / +180°C**	Temperatura: **-20°C / +180°C**

Filettatura	Thread types	Gewinde	Filetage	Roscado
BSPP cilindrica UNI-ISO228	BSPP parallel UNI-ISO228	BSPP zylindrisch UNI-ISO228	BSPP cylindrique UNI-ISO228	BSPP cilíndrico UNI-ISO 228

Filetti
Filettature da 1/8" a 1"

Threads
Threads from 1/8" to 1"

Gewinde
Gewinde von 1/8" bis 1"

Filets
Filetages de 1/8" à 1"

Roscas
Roscas de 1/8" a 1"

Note
Taratura su richiesta: max 1 Bar

Note
Calibration on request: max 1 Bar

Note
Kalibrierung auf Anfrage: max 1 Bar

Notes
Calibrage sur demande: max 1 Bar

Notas
Calibración a petición: max 1 bar

• VX 58

Materiali		Materials		Werkstoffen		Matériels		Materiales	
Corpo:	Acciaio INOX AISI 316L	**Body:**	AISI 316L stainless steel	**Körper:**	Edelstahl AISI 316L	**Corps:**	Acier inoxydable AISI 316L	**Cuerpo:**	Acero inoxidable AISI 316L
Guarnizione:	PTFE + Vetro	**Seat:**	PTFE + Glass	**Dichtung:**	PTFE + Glas	**Sceau:**	PTFE + Verre	**Sello:**	PTFE + Vidrio

Pressione e temperatura	Pressure and Temperature	Druck und Temperatur	Pression et Température	Presión y Temperatura
Pressione: **400 Bar**	Pressure: **400 Bar**	Druck: **400 Bar**	Pression: **400 Bar**	Presión: **400 Bar**
Temperatura: **-20°C / +180°C**	Temperature: **-4°F / +356°F**	Temperatur: **-20°C / +180°C**	Température: **-20°C / +180°C**	Temperatura: **-20°C / +180°C**

Filettatura	Thread types	Gewinde	Filetage	Roscado
BSPP cilindrica UNI-ISO228	BSPP parallel UNI-ISO228	BSPP zylindrisch UNI-ISO228	BSPP cylindrique UNI-ISO228	BSPP cilíndrico UNI-ISO 228

Filetti
Filettature da 1/8" a 1/2"

Threads
Threads from 1/8" to 1/2"

Gewinde
Gewinde von 1/8" bis 1/2"

Filets
Filetages de 1/8" à 1/2"

Roscas
Roscas de 1/8" a 1/2"

• VX 64

Materiali		Materials		Werkstoffen		Matériels		Materiales	
Corpo:	Acciaio INOX	**Body:**	Stainless steel	**Körper:**	Edelstahl	**Corps:**	Acier inoxydable	**Cuerpo:**	Acero inoxidable
Manicotto:	Acciaio INOX	**Body end:**	Stainless steel	**Armel:**	Edelstahl	**Manche:**	Acier inoxydable	**Manga:**	Acero inoxidable
Sede sfera:	PTFE	**Ball seat:**	PTFE	**Kugelsitz:**	PTFE	**Siège de sphère:**	PTFE	**Asiento de esfera:**	PTFE
Sfera:	Acciaio INOX	**Ball:**	Stainless steel	**Kugel:**	Edelstahl	**Sphère:**	Acier inoxydable	**Esfera:**	Acero inoxidable
Asta:	Acciaio INOX	**Stem:**	Stainless steel	**Stange:**	Edelstahl	**Canne:**	Acier inoxydable	**Vara:**	Acero inoxidable
O-Ring:	FKM (VITON®) conforme FDA	**O-Ring:**	FKM (VITON®) conforming FDA	**O-Ringe:**	FKM (VITON®) gemäß FDA	**O-ring:**	FKM (VITON ®) conforme FDA	**Junta tórica:**	FKM (VITON®) compatible FDA
Maniglia:	Acciaio INOX	**Handle:**	Stainless steel	**Griff:**	Edelstahl	**Poignée:**	Acier inoxydable	**Manejar:**	Acero inoxidable
Dado:	Acciaio INOX	**Nut:**	Stainless steel	**Mutter:**	Edelstahl	**Écrou:**	Acier inoxydable	**Tuerca:**	Acero inoxidable

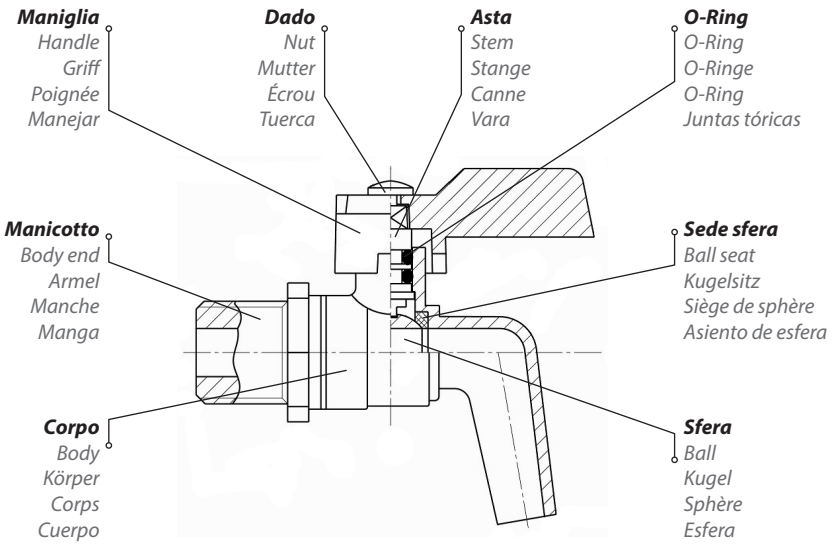

Filettatura	Thread types	Gewinde	Filetage	Roscado
BSPP cilindrica UNI-ISO228	BSPP parallel UNI-ISO228	BSPP zylindrisch UNI-ISO228	BSPP cylindrique UNI-ISO228	BSPP cilíndrico UNI-ISO 228

Filetti
Filettature da 3/8" a 1/2"

Threads
Threads from 3/8" to 1/2"

Gewinde
Gewinde von 3/8" bis 1/2"

Filets
Filetages de 3/8" à 1/2"

Roscas
Roscas de 3/8" a 1/2"

• VX 65

Materiali		Materials		Werkstoffen		Matériels		Materiales	
Corpo:	CF8M/CF8	**Body:**	CF8M/CF8	**Körper:**	CF8M/CF8	**Corps:**	CF8M/CF8	**Cuerpo:**	CF8M/CF8
Manicotto:	CF8M/CF8	**Body end:**	CF8M/CF8	**Armel:**	CF8M/CF8	**Manche:**	CF8M/CF8	**Manga:**	CF8M/CF8
Sede sfera:	PTFE	**Ball seat:**	PTFE	**Kugelsitz:**	PTFE	**Siège de sphère:**	PTFE	**Asiento de esfera:**	PTFE
Sfera:	Acciaio INOX AISI 316/304	**Ball:**	AISI 316/304 stainless steel	**Kugel:**	Edelstahl AISI 316/304	**Sphère:**	Acier inoxydable AISI 316/304	**Esfera:**	Acero inoxidable AISI 316/304
Asta:	Acciaio INOX AISI 304	**Stem:**	AISI 304 stainless steel	**Stange:**	Edelstahl AISI 304	**Canne:**	Acier inoxydable AISI 304	**Vara:**	Acero inoxidable AISI 304
Rondella asta:	Acciaio INOX AISI 304	**Rod washer:**	PPL AISI 304 stainless steel	**Stangenwascher:**	Edelstahl AISI 304	**Rondelle de tige:**	Acier inoxydable AISI 304	**Arandela de varilla:**	Acero inoxidable AISI 304
Guarnizione asta:	PTFE	**Stem seat:**	PTFE	**Dichtund des Stange:**	PTFE	**Joint de tige:**	PTFE	**Prensaestopas:**	PTFE
Maniglia:	Acciaio INOX AISI 304	**Handle:**	AISI 304 stainless steel	**Griff:**	Edelstahl AISI 304	**Poignée:**	Acier inoxydable AISI 304	**Manejar:**	Acero inoxidable AISI 304
Dado:	Acciaio INOX AISI 304	**Nut:**	AISI 304 stainless steel	**Mutter:**	Edelstahl AISI 304	**Écrou:**	Acier inoxydable AISI 304	**Tuerca:**	Acero inoxidable AISI 304
Portagomma:	CF8M/CF8	**Nipple:**	CF8M/CF8	**Schlauchtülle:**	CF8M/CF8	**Embout:**	CF8M/CF8	**Boquilla:**	CF8M/CF8
Attacco tubo irrigazione:	CF8M/CF8	**Hose connection:**	CF8M/CF8	**Schlauchverbindung:**	CF8M/CF8	**Raccord pour tuyau flexible:**	CF8M/CF8	**Conducto en tubo flexible:**	CF8M/CF8
Guarnizione:	PTFE	**Gasket:**	PTFE	**Dichtung:**	PTFE	**Joint:**	PTFE	**Junta:**	PTFE
O-Ring:	NBR esente da silicone	**O-Ring:**	NBR silicon free	**O-Ringe:**	NBR Silikonfrei	**O-ring:**	NBS sans silicone	**Junta tórica:**	NBR sin silicona
Cover plastica:	PVC	**Plastic sleeve:**	PVC	**Kunststoffabdeckung:**	PVC	**Couvercle en plastique:**	PVC	**Cubierta de plástico:**	PVC

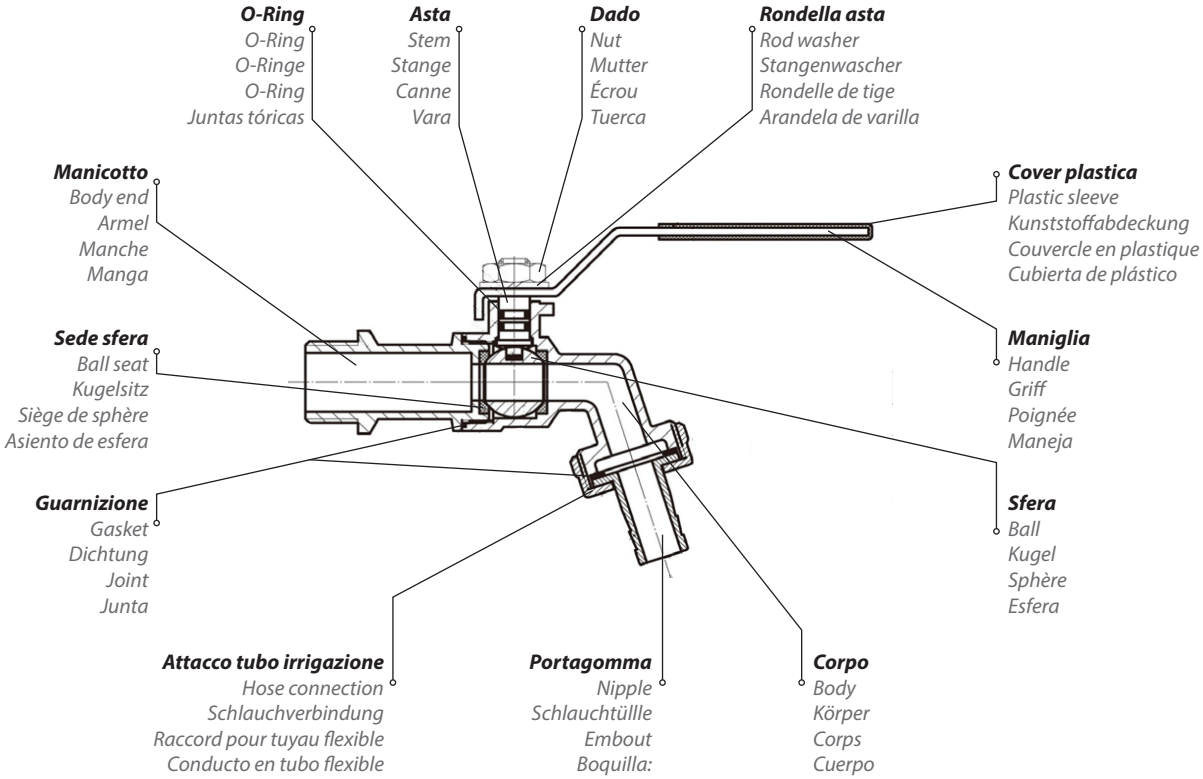

Filettatura	Thread types	Gewinde	Filetage	Roscado
BSPP cilindrica UNI-ISO228	BSPP parallel UNI-ISO228	BSPP zylindrisch UNI-ISO228	BSPP cylindrique UNI-ISO228	BSPP cilíndrico UNI-ISO 228

Filetti
Filettature da 1/2" a 1"

Threads
Threads from 1/2" to 1"

Gewinde
Gewinde von 1/2" bis 1"

Filets
Filetages de 1/2" à 1"

Roscas
Roscas de 1/2" a 1"

• VX 66

Materiali		Materials		Werkstoffen		Matériels		Materiales	
Corpo:	CF8M	**Body:**	CF8M	**Körper:**	CF8M	**Corps:**	CF8M	**Cuerpo:**	CF8M
Manicotto:	CF8M	**Body end:**	CF8M	**Armel:**	CF8M	**Manche:**	CF8M	**Manga:**	CF8M
Molla:	Acciaio INOX AISI 316	**Spring:**	AISI 316 stainless steel	**Feder:**	Edelstahl AISI 316	**Ressort:**	Acier inoxydable AISI 316	**Muelle:**	Acero inoxidable AISI 316
Anello:	CF8M	**Disc:**	CF8M	**Kranz:**	CF8M	**Corona:**	CF8M	**Corona:**	CF8M
Guarnizione:	PTFE	**Gasket:**	PTFE	**Dichtung:**	PTFE	**Joint:**	PTFE	**Junta:**	PTFE

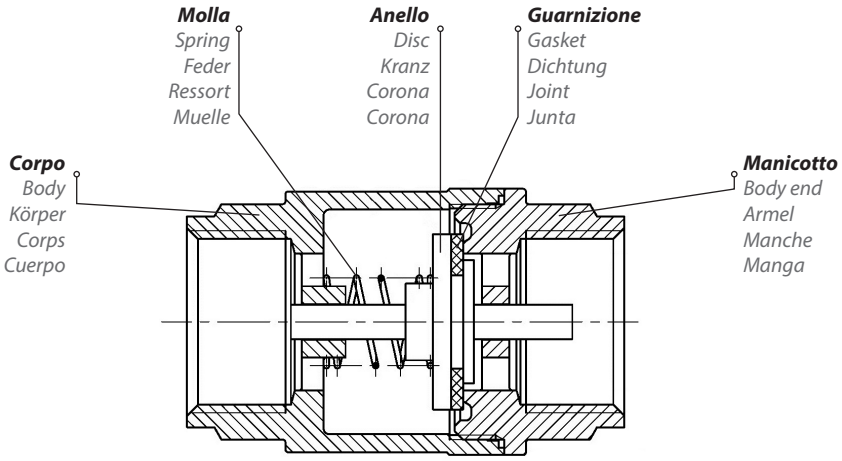

Pressione e temperatura	Pressure and Temperature	Druck und Temperatur	Pression et Température	Presión y Temperatura
Pressione: **16 Bar**	Pressure: **16 Bar**	Druck: **16 Bar**	Pression: **16 Bar**	Presión: **16 Bar**
Temperatura: **-15°C / +100°C**	Temperature: **5°F / +212°F**	Temperatur: **-15°C / +100°C**	Température: **-15°C / +100°C**	Temperatura: **-15°C / +100°C**

Filettatura	Thread types	Gewinde	Filetage	Roscado
BSPP cilindrica UNI-ISO228	BSPP parallel UNI-ISO228	BSPP zylindrisch UNI-ISO228	BSPP cylindrique UNI-ISO228	BSPP cilíndrico UNI-ISO 228

Filetti
Filettature da 3/8" a 2"

Threads
Threads from 3/8" to 2"

Gewinde
Gewinde von 3/8" bis 2"

Filets
Filetages de 3/8" à 2"

Roscas
Roscas de 3/8" a 2"

VX 40



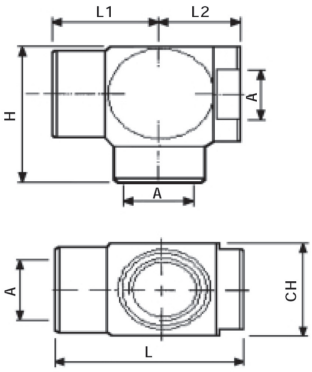

Valvola di scarico rapido F.F.S.S. AISI 316L

S.S AISI 316L quick exhaust valve

Schnellentlüftungsventil AISI 316L

Vanne à purge rapide F.F.S.S. AISI 316L

Válvula de escape rápido F.F.S.S. AISI 316L

CODICE/CODE	A"	L	L1	L2	H	CH	Kg	PEZZI/PIECES
VX400018	G1/8	37,5	21	16,5	32	22	0,096	1
VX400014	G1/4	37,5	21	16,5	32	22	0,082	1
VX400038	G3/8	44,5	25,5	19	37	26	0,138	1
VX400012	G1/2	54	23	31	45	32	0,236	1

VX 45



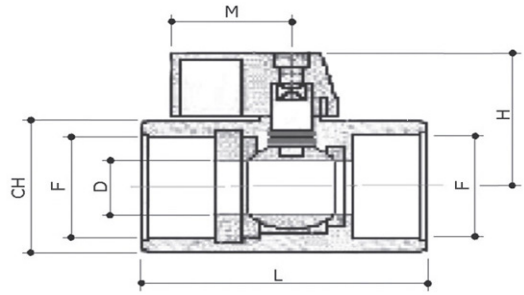

Rubinetto a sfera femmina-femmina AISI 316

INOX AISI 316 hexagonal mini ball valve female-female

Kugelhahn Edelstahl AISI 316

Mini robinet taraudage AISI 316

Válvula a esfera mini hembra–hembra AISI 316

CODICE/CODE	F	D	CH	M	H	L	PEZZI/PIECES
VX450018	G1/8	5	-	21	25	42	1
VX450014	G1/4	7	21	21	25	42	1
VX450038	G3/8	7	21	21	25	42	1
VX450012	G1/2	9,2	25	21	28,3	46	1
VX450034	G3/4	12,5	-	21	31,5	54	1
VX450001	G1"	15	-	21	34	65	1

VX 46K



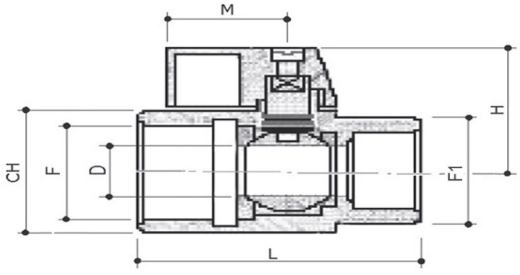

Rubinetto a sfera maschio-femmina AISI 316

INOX AISI 316 hexagonal mini ball valve male-female

Kugelhahn Edelstahl AISI 316

Mini robinet filetage - taraudage AISI 316

Válvula a esfera mini macho - hembra AISI 316

CODICE/CODE	F	F1	D	CH	M	H	L	PEZZI/PIECES
VX46K0018	G1/8	R1/8	5	-	23	25	41	1
VX46K0014	G1/4	R1/4	8	21	23	25,5	43	1
VX46K0038	G3/8	R3/8	8	21	23	25	41	1
VX46K0012	G1/2	R1/2	9,2	25	21,5	28	46	1
VX46K0034	G3/4	R3/4	12,5	31	23	31,5	54	1
VX46K0001	G1"	R1"	15	-	23	34	65	1

VX 50-CP



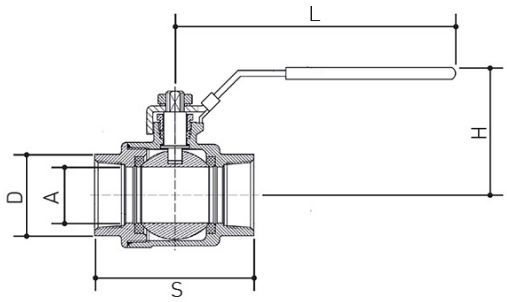

Valvola a sfera femmina-femmina INOX AISI 316

INOX AISI 316 ball valve female-female

Kugelhähne Edelstahl AISI 316

Robinet taraudage INOX AISI 316

Válvula a esfera hembra - hembra INOX AISI 316

CODICE/CODE	Size	D	A	S	H	L	PEZZI/PIECES
VX500014CP	G1/4	18	11,4	49	47	105	1
VX500038CP	G3/8	21	12,5	49	47	105	1
VX500012CP	G1/2	24,5	15	56	50	105	1
VX500034CP	G3/4	30	20	65	57	110	1
VX500001CP	G1"	37,5	25	76,5	62	115	1
VX500114CP	G1"1/4	46,5	32	87	74	150	1
VX500112CP	G1"1/2	53	38	98	90	150	1
VX500002CP	G2	66	50	119	92	170	1
VX500212CP	G2"1/2	83	65	144,5	118	228	1
VX500003CP	G3"	97,5	76	167	125	228	1
VX500004CP	G4"	128	94	222	175	325	1

VX 51



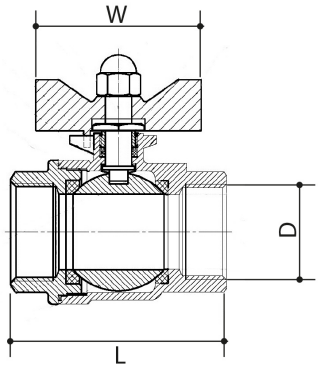

Valvola a sfera femmina-femmina con maniglia INOX AISI 316

Ball valve female-female with handle INOX AISI 316

Kugelhähne mit handgriff Edelstahl AISI 316

Robinet taraudage avec manette INOX AISI 316

Válvula a esfera hembra - hembra con ango INOX AISI 316

CODICE/CODE	Size	D	L	W	CH	PEZZI/PIECES
VX510014	G1/4	11,6	48,5	48	19	1
VX510038	G3/8	12,5	48,5	48	21	1
VX510012	G1/2	15	58	48	25,5	1
VX510034	G3/4	20	65	55	31	1
VX510001	G1	25	77	55	37,5	1

VX 52



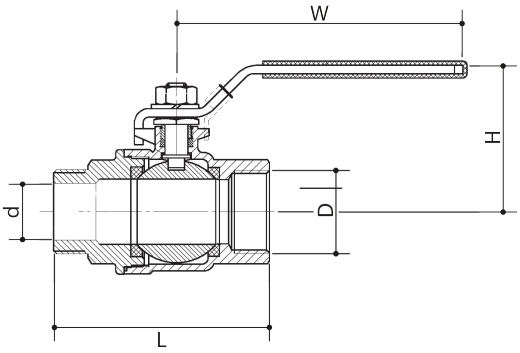

Valvola a sfera maschio-femmina con leva INOX AISI 316

Ball valve male-female with lever INOX AISI 316

Kugelhähne mit hebel Edelstahl AISI 316

Robinet taraudage avec poignèe INOX AISI 316

Válvula a esfera hembra - hembra con palanca INOX AISI 316

CODICE/CODE	Size	D	d	L	H	W	CH	PEZZI/PIECES
VX520014	G1/4	11,6	9	57	46	100	19	1
VX520038	G3/8	12,5	12,5	57	47	100	21	1
VX520012	G1/2	15	15	68	48	100	25,5	1
VX520034	G3/4	20	20	77	57,5	112	31	1
VX520001	G1"	25	25	91	61	112	37,5	1
VX520041	G1" 1/4	32	32	101,5	77,5	145	46,5	1
VX520021	G1" 1/2	38	38	113	82	145	53,5	1
VX520002	G2"	50	50	138	98	164	66	1

VX 53



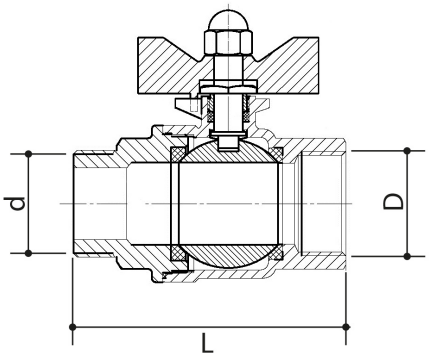

Valvola a sfera maschio-femmina con maniglia INOX AISI 316

Ball valve male-female with handle INOX AISI 316

Kugelhähne mit handgriff Edelstahl AISI 316

Robinet taraudage avec manette INOX AISI 316

Válvula a esfera macho - hembra con mango INOX AISI 316

CODICE/CODE	Size	D	d	L	CH	PEZZI/PIECES
VX530014	G1/4	11,6	8	55,2	48	1
VX530038	G3/8	12,5	10,5	55,2	48	1
VX530012	G1/2	15	13,6	71,5	48	1
VX530034	G3/4	20	18,2	78	55	1
VX530001	G1"	25	23	91	55	1

VX 54



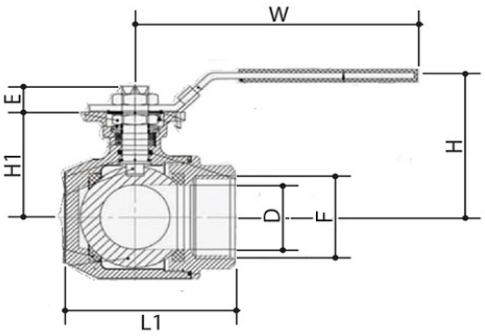

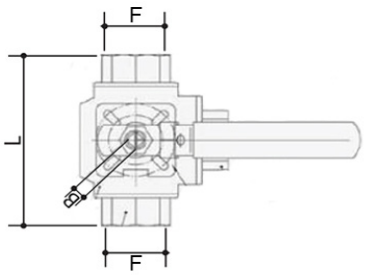

Valvole a sfera INOX AISI 316 Femmina-Femmina-Femmina (forata a "L")

INOX AISI 316 Brass ball valves Female-Female-Female (Either "L")

L-Kugelhähne Edelstahl AISI 316 Drei-Wege

Robinet 3 voies en L taraudee INOX AISI 316

Válvula 3 vias a L hembra INOX AISI 316

CODICE/CODE	F"	D	W	L	L1	H	B	E	H1	PEZZI/PIECES
VX540014	G1/4	9	139	79	64	73	9	9	42	1
VX540038	G3/8	11	139	79	64	73	9	9	42	1
VX540012	G1/2	12,5	139	79	64	73	9	9	42	1
VX540034	G3/4	16	139	83	68	80	9	9	49	1
VX540001	G1"	20	160	104	82	95	11	11	59,5	1
VX540114	G1"1/4	25	160	111	90	98	11	11	63	1
VX540112	G1"1/2	32	185	126	106	110	14	14	73,5	1
VX540002	G2"	38	185	147	123	119	14	14	82,8	1

VX 55



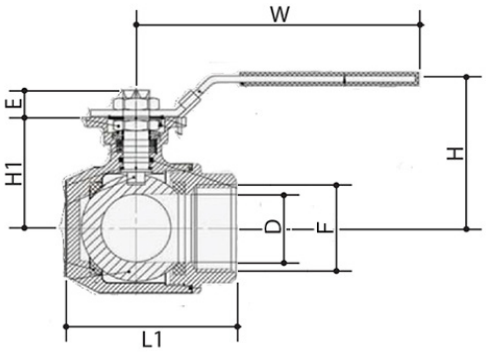

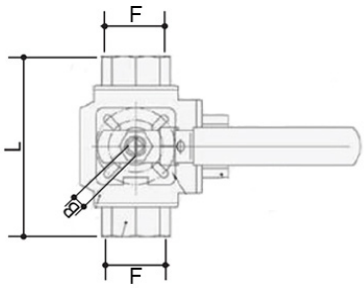

Valvole a sfera INOX AISI 316 Femmina-Femmina-Femmina (forata a "T")

INOX AISI 316 Brass ball valves Female-Female-Female (Either "T")

T-Kugelhähne Edelstahl AISI 316 Drei-Wege

Robinet 3 voies en T taraudee INOX AISI 316

Válvula 3 vias a T hembra INOX AISI 316

CODICE/CODE	F"	D	W	L	L1	H	B	E	H1	PEZZI/PIECES
VX550014	G1/4	9	139	79	64	73	9	9	42	1
VX550038	G3/8	11	139	79	64	73	9	9	42	1
VX550012	G1/2	12,7	140	75,8	64	67	9	10	42	1
VX550034	G3/4	16	140	87,2	68	72	9	10	49	1
VX550001	G1"	20	162	104	82	85	11	12	59,5	1
VX550114	G1"1/4	25	162	116	90	89	11	14	63	1
VX550112	G1"1/2	32	189	127	106	97	14	12	73,5	1
VX550002	G2"	38	189	148	123	106	14	15	82,8	1

VX 56



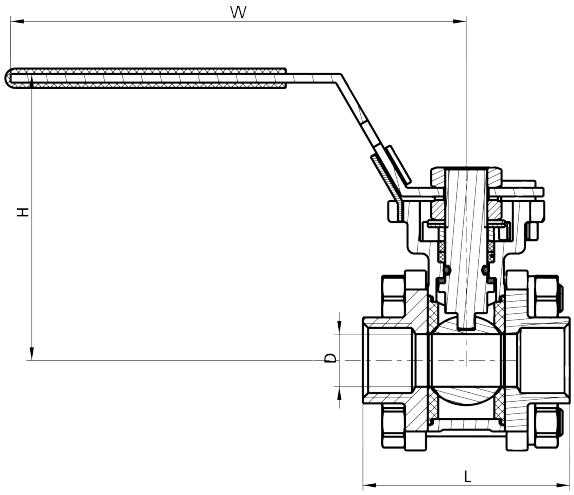

Valvola a sfera Femmina -Femmina 3 pezzi INOX AISI 316

INOX AISI 316 ball valves Female-Female 3 pieces

Kugelhähne Edelstahl AISI 316 3 Stück

Robinet taraudage trois pièces INOX AISI 316

Válvula a esfera tres piezas hembra - hembra INOX AISI 316

CODICE/CODE	F"	D	L	H	W	PEZZI/PIECES
VX560014	1/4	11,6	61	49	103	1
VX560038	3/8	12,5	61	49	103	1
VX560012	1/2	15	63	57	108	1
VX560034	3/4	20	72	62	108	1
VX560001	1"	25	82,5	72	129	1
VX560114	1"1/4	32	97,5	78	129	1
VX560112	1"1/2	38	108,5	91	160	1
VX560002	2"	50	124	102	160	1

VX 57



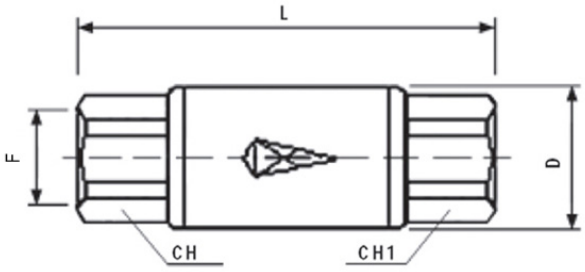

Valvola unidirezionale AISI 316L Femmina-Femmina

INOX AISI 316L unidirectional valve Female-Female

Einweg Hähne Edelstahl AISI 316L

Clapet anti-retour, femelle - femelle AISI 316L

Válvula unidireccional hembra-hembra AISI 316L

CODICE/CODE	F"	L	D	CH	CH1	PEZZI/PIECES
VX570018	G1/8	50	22	17	17	1
VX570014	G1/4	50	22	17	17	1
VX570038	G3/8	67	30	22	22	1
VX570012	G1/2	71	30	24	24	1

VX 58



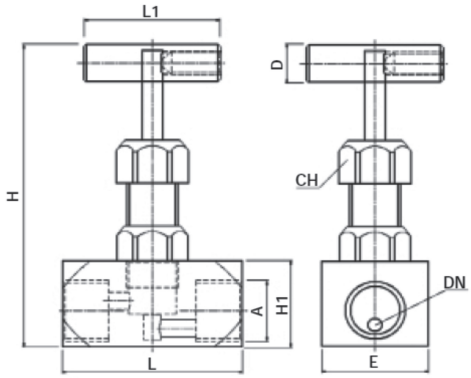

Rubinetto a spillo AISI 316L

INOX AISI 316L hexagonal needle valve

Kugelhahn mit Knebel AISI 316L

Valve a pointeau AISI 316L

Válvula de aguja hexagonal AISI 316L

CODICE/CODE	A"	L	L1	H	H1	E	CH	D	Kg	PEZZI/PIECES
VX580018	G1/8	45	48	90/99	25	25	22	13	0.344	1
VX580014	G1/4	50	48	89/99	25	25	22	13	0.354	1
VX580038	G3/8	56	48	90/I04	30	30	22	13	0.470	1
VX580012	G1/2	62	48	90/104	30	30	22	13	0.468	1

VX 64



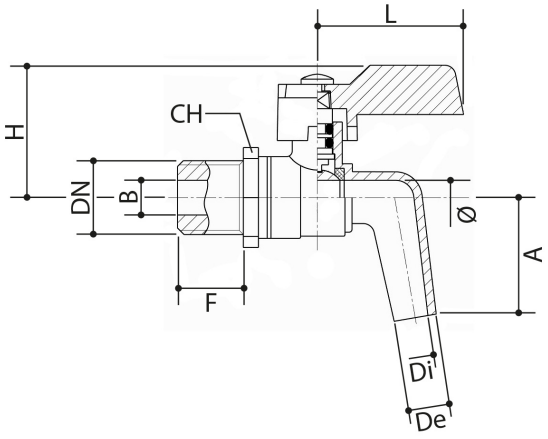

Rubinetto a sfera curvo per botti INOX AISI 316

Ball bibcock for barrels INOX AISI 316

Winkelwasserhahn INOX AISI 316

Robinet à boisseau sphérique pour barils NOX AISI 316

Válvula esfera barril INOX AISI 316

CODICE/CODE	DN	B	F	H	L	CH	S	Di	De	Ø	A	PEZZI/PIECES
VX640038	G3/8	11	10	36,5	38	29	49	8,5	13	10	29,5	1
VX640012	G1/2	13	13	36,5	38	29	49	8,5	13	10	29,5	1

VX 65



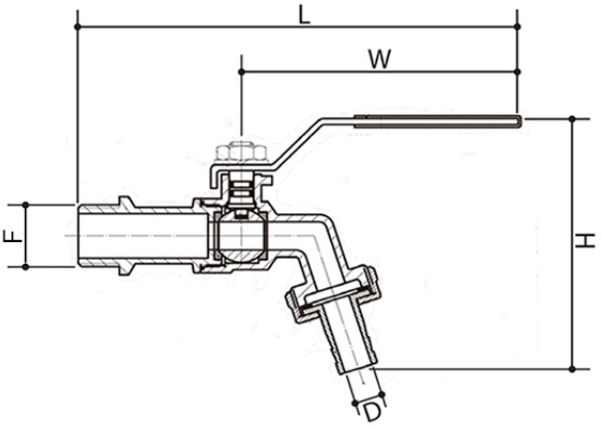

Rubinetto di erogazione a sfera con portagomma INOX AISI 316

Ball bibcock with hose tail INOX AISI 316

Wasserhahn mit Schlauchtülle INOX AISI 316

Mini robinet taraudage approvisionnement INOX AISI 316

Válvula a esfera de suministro INOX AISI 316

CODICE/CODE	F"	D	H	W	L	PEZZI/PIECES
VX650012	G1/2	9	91	92	138	1
VX650034	G3/4	15	102	92	145	1
VX650001	G1"	20	116	92	158	1

VX 66



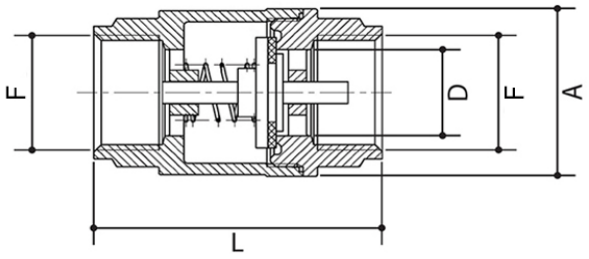

Valvola di ritegno INOX AISI 316

Check valve INOX AISI 316

Kugelrückschlagventil INOX AISI 316

Clapet anti-retour INOX AISI 316

Válvula de retención INOX AISI 316

CODICE/CODE	F"	D	A	L	PEZZI/PIECES
VX660038	G3/8	13	34,5	49	1
VX660012	G1/2	15	34	53,5	1
VX660034	G3/4	20	41,5	58	1
VX660001	G1"	25	47,5	65	1
VX660041	G1"1/4	32	60,5	72,5	1
VX660021	G1"1/2	40	71	76	1
VX660002	G2"	50	87	88,5	1