

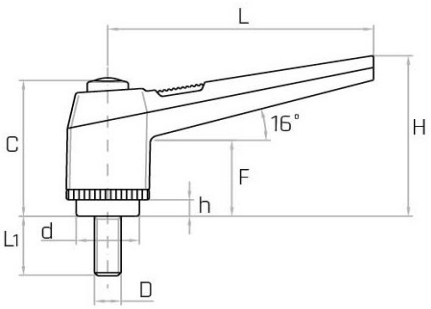


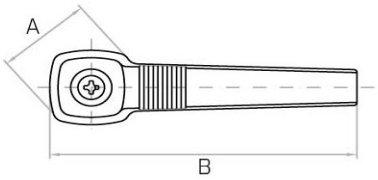


| Codice | Modello | L mm | C mm | A mm | B mm | H mm | F mm | d mm | h mm | L1 mm | D | Peso gr. |
|---|---|---|---|---|---|---|---|---|---|---|---|---|
| 6356675 | **KRP/63 M8x30** | 63 | 39 | 25 | 73 | 43 | 21 | 15 | 4 | 30 | M8 | 36 |
| 6357680 | **KRP/80 M10x40** | 80 | 48 | 30 | 92 | 54 | 27 | 19 | 6 | 40 | M10 | 66 |
| 6358630 | **KRP/100 M12x40** | 100 | 58 | 36 | 115 | 66 | 30 | 25 | 8 | 40 | M12 | 120 |