# VB/FP

## Volantino a sei lobi
## Six lobe-knob
## Petit volant à six lobes

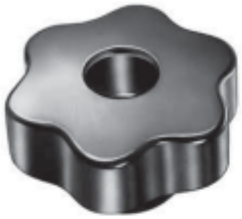

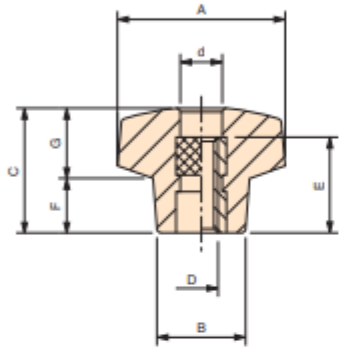


Bussola ottone foro passante filettato.
Brass insert with tapped through hole.
Insert en laiton traversant taraudé.

| cod. | modello | A | B | C | D | E | F | G | d | Peso gr. |
|---|---|---|---|---|---|---|---|---|---|---|
| 6114002 | **VB/20/FP** | 20 | 13 | 15 | M4 | 11 | 7 | 8 | 7,5 | 6 |
| 6114003 | **VB/20/FP** | 20 | 13 | 15 | M5 | 11 | 7 | 8 | 7,5 | 7 |
| 6114005 | **VB/20/FP** | 20 | 13 | 15 | M6 | 11 | 7 | 8 | 7,5 | 10 |
| 6114010 | **VB/30/FP** | 30 | 17 | 24 | M5 | 15 | 11 | 12,5 | 9 | 15 |
| 6114015 | **VB/30/FP** | 30 | 17 | 24 | M6 | 15 | 11 | 12,5 | 9 | 16 |
| 6114020 | **VB/30/FP** | 30 | 17 | 24 | M8 | 15 | 11 | 12,5 | 9 | 17 |

**NOTE:** Si forniscono, per quantità adeguate, in colori diversi e con inserti a misura in acciaio, in ottone, in acciaio inox.

**Materiale:** Duroplasto nero.
Black phenolic plastic.
Duroplast noir.


# VB/FP

## Volantino a sei lobi
## Six lobe-knob
## Petit volant à six lobes




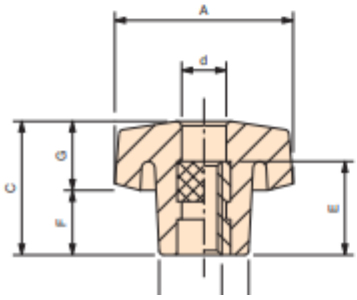


Bussola ottone foro passante filettato.
Brass insert with tapped through hole.
Insert en laiton traversant taraudé.

| cod. | modello | A | B | C | D | E | F | G | d | Peso gr. |
|---|---|---|---|---|---|---|---|---|---|---|
| 6114025 | **VB/40/FP** | 40 | 21 | 28 | M 6 | 18 | 13 | 15 | 11 | 28 |
| 6114030 | **VB/40/FP** | 40 | 21 | 28 | M 8 | 18 | 13 | 15 | 11 | 29 |
| 6114035 | **VB/40/FP** | 40 | 21 | 28 | M 10 | 18 | 13 | 15 | 11 | 31 |
| 6114040 | **VB/50/FP** | 50 | 25 | 33 | M 8 | 18 | 15 | 18 | 13 | 43 |
| 6114045 | **VB/50/FP** | 50 | 25 | 33 | M 10 | 18 | 15 | 18 | 13 | 45 |
| 6114050 | **VB/50/FP** | 50 | 25 | 33 | M 12 | 18 | 15 | 18 | 13 | 47 |
| 6114055 | **VB/60/FP** | 60 | 28 | 35 | M 10 | 25 | 15 | 20 | 11 | 70 |
| 6114060 | **VB/60/FP** | 60 | 28 | 35 | M 12 | 25 | 15 | 20 | 13 | 70 |
| 6114065 | **VB/60/FP** | 60 | 28 | 35 | M 14 | 25 | 15 | 20 | 15 | 70 |
| 6114070 | **VB/60/FP** | 60 | 28 | 35 | M 16 | 25 | 15 | 20 | 17 | 68 |
| 6114075 | **VB/70/FP** | 70 | 32 | 42 | M 10 | 25 | 21 | 21 | 11 | 92 |
| 6114080 | **VB/70/FP** | 70 | 32 | 42 | M 12 | 25 | 21 | 21 | 13 | 96 |
| 6114085 | **VB/70/FP** | 70 | 32 | 42 | M 14 | 25 | 21 | 21 | 15 | 94 |
| 6114090 | **VB/70/FP** | 70 | 32 | 42 | M 16 | 25 | 21 | 21 | 17 | 93 |

**NOTE:** Si forniscono, per quantità adeguate, in colori diversi e con inserti a misura in acciaio, in ottone, in acciaio inox.

**Materiale:** Duroplasto nero.